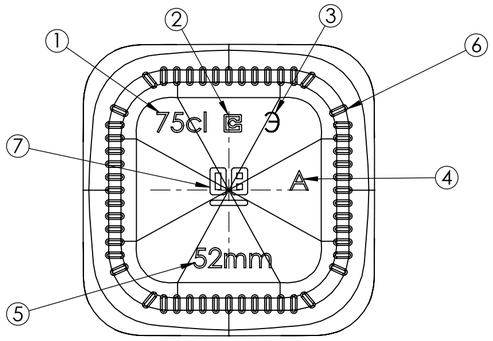

BOTTOM VIEW

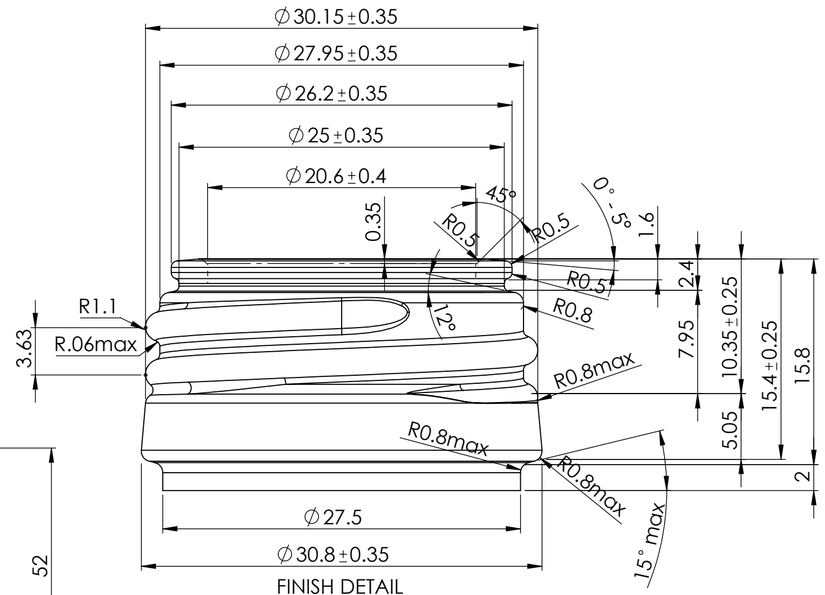

FINISH DETAIL
SCALE 3:1

MINIMUM THROUGH BORE ∅17

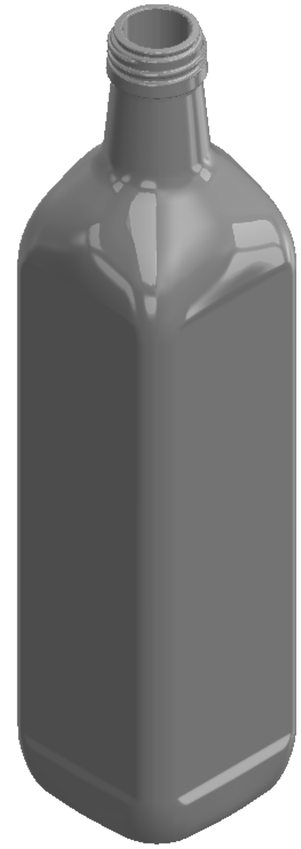

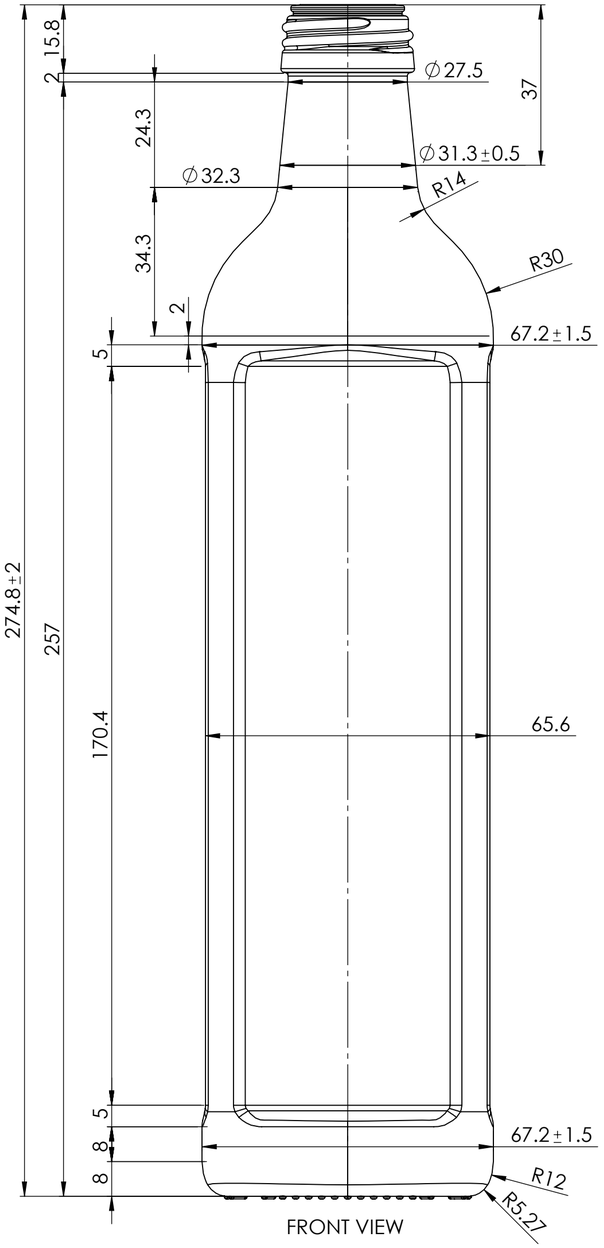

FRONT VIEW

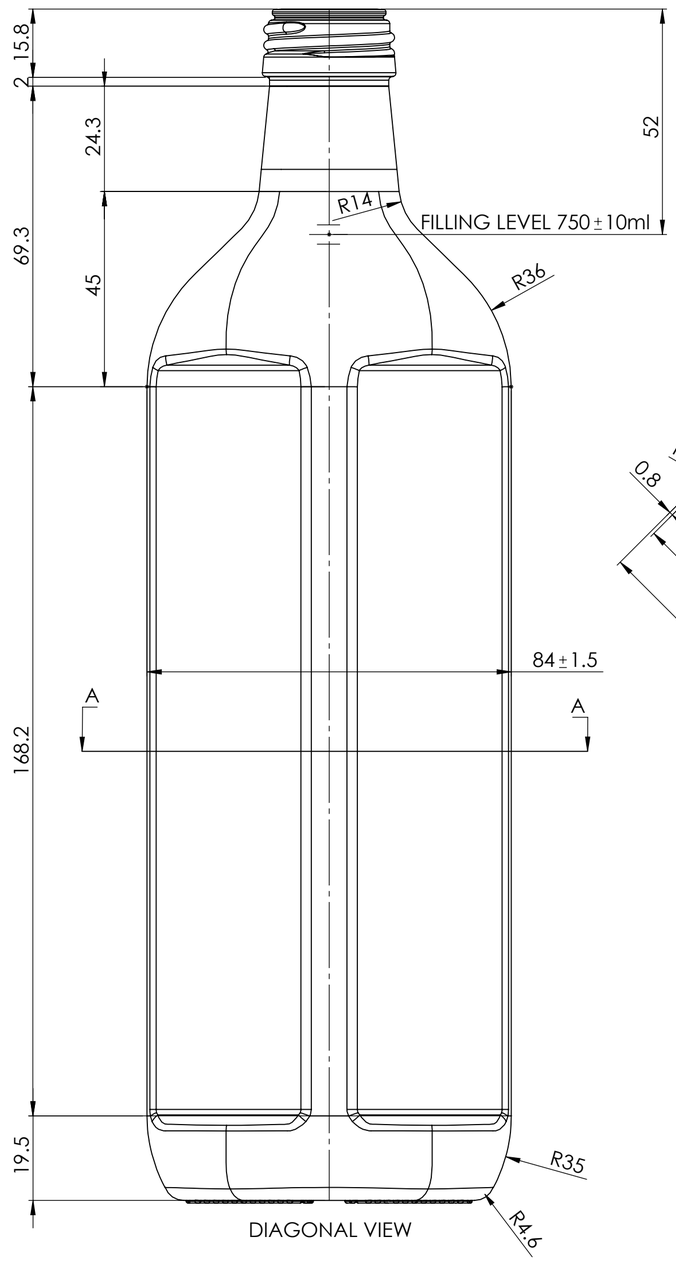

DIAGONAL VIEW

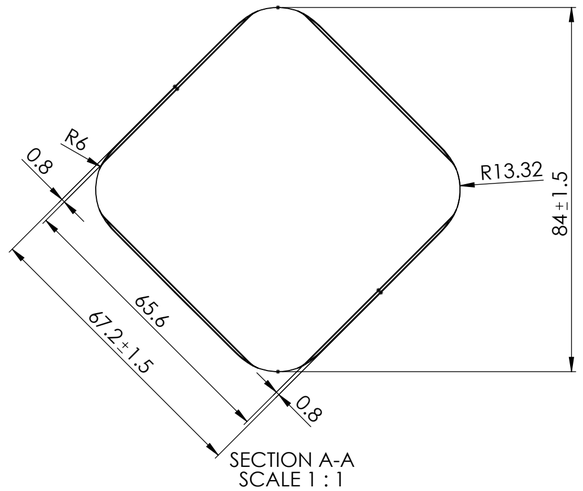

SECTION A-A
SCALE 1 : 1

1. CAPACITY - 4.5mm HEIGHT, 0.5mm DEEP
2. FACTORY LOGO - 4.5mm HEIGHT, 0.5mm DEEP
3. EPSILON SYMBOL - 4.5mm HEIGHT, 0.5mm DEEP
4. "A" LETTER - 4.5mm HEIGHT, 0.5mm DEEP
5. FILLING LEVEL - 4.5mm HEIGHT, 0.5mm DEEP
6. BAR STIPPLES
7. DIGITAL MOULD NUMBER - 0.6mm DEPTH, PATTERN SIZE - STANDARD, 2.5mm PITCH

All copyrights are reserved. This technical document should not be disclosed to third parties without the permission of "RUBIN TRADING" JSC.

5	
4	
3	
2	
1	

-----REVISIONS-----

SHEET 1/1	PRODUCT NAME:	**BOTTLE MARASKA 750ml.**			
A2	ИЗДЕЛИЕ:	**БУТИЛКА МАРАСКА 750ml.**			
SCALE	Drawing No:	**128300_BOTTLE_MARASKA_750ml_PP31.5_VAE**	FINISH TYPE:	PP31.5 MEDEIA VAE - UNI10666	
1:1	DRAWN:	N.PETKOV	21/5/24	PRODUCT CODE: 128300	DATE 21.05.2024
	CHECKED:	KAMENOV	21/5/24		

"RUBIN TRADING" JSC - MOULD DESIGN DEPARTMENT
e-mail: moulddesign@rubin-glass.bg
web site: www.rubin-glass.bg

WEIGHT	430 ± 10 g
NOMINAL CAPACITY	750 ± 10 ml
BRIMFUL CAPACITY	775 ± 10 ml
COLOR	FLINT/UVAG
FILLING LINE	52 mm
TIP ANGLE	12.6°
HEADSPACE	3.2 %
CARBONATION	NO
RETURNABLE	NO
CUSTOMER	FACTORY OWNED
PRODUCTION PROCESS	BLOW&BLOW

REV.