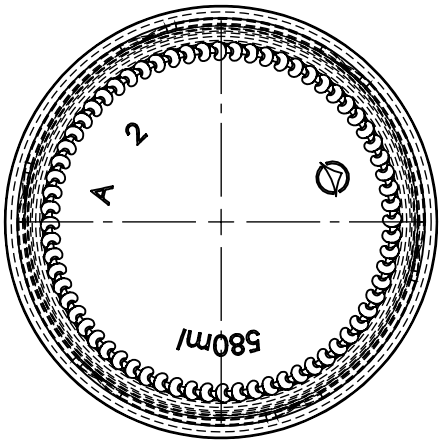

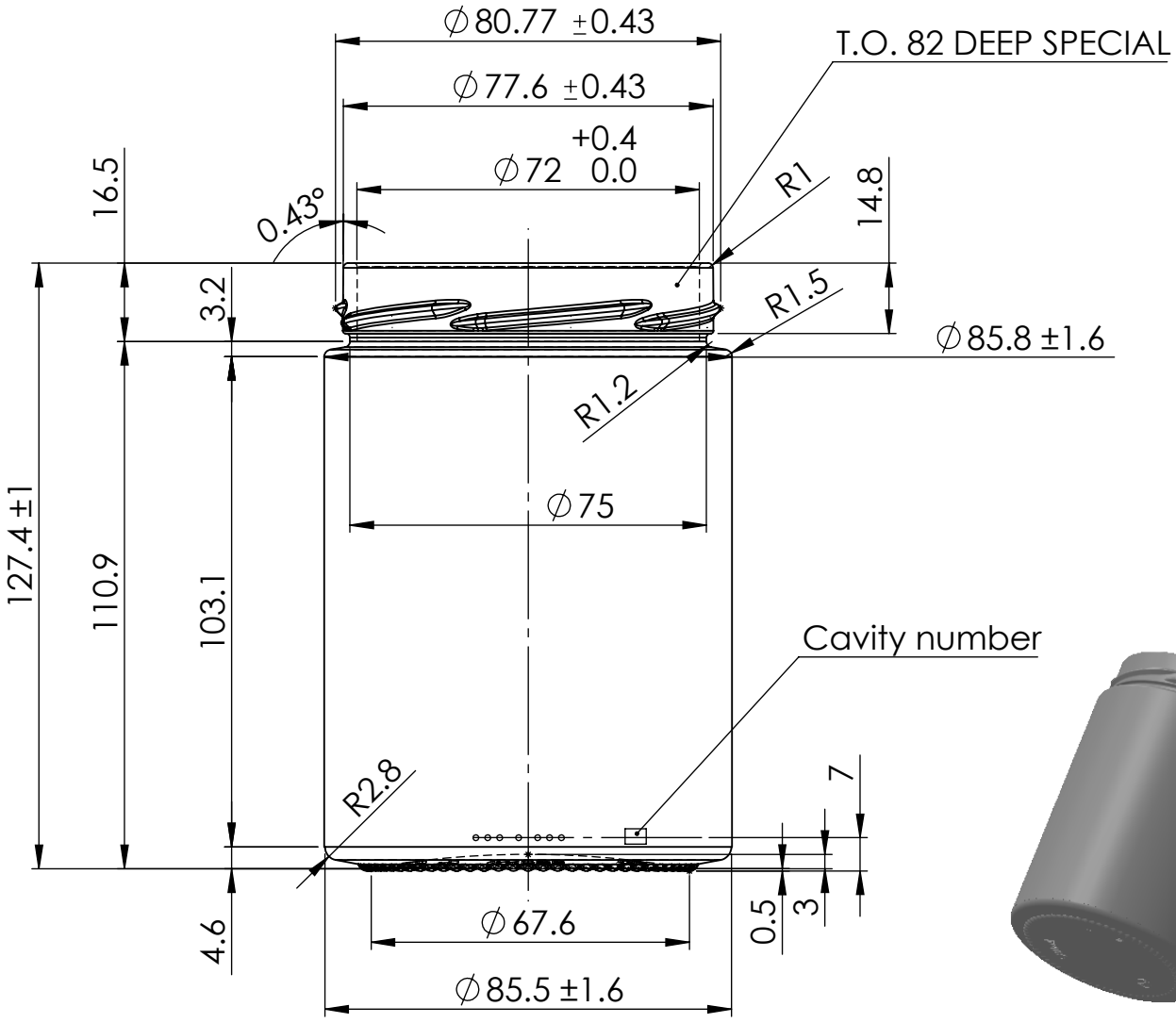

All copyrights are reserved. This technical document should not be disclosed to third parties without the permission of "RUBIN TRADING" JSC.

5	
4	
3	
2	
1	

-----REVISIONS-----

SHEET 1/1	PRODUCT NAME:	**JAR SOFIA 580ml**				
A4	ИЗДЕЛИЕ:	**БУРКАН СОФИЯ 580мл**				
SCALE	Drawing No: 124300_JAR_SOFIA_580ml.SLDDRW			FINISH TYPE: T.O. 82 DEEP SPECIAL		
1:1.5	DRAWN:	K.IVANOV	31/5/23	PRODUCT CODE: 124300	DATE	31.05.2023
	CHECKED:	KAMENOV	31/5/23			

"RUBIN TRADING" JCS - MOULD DESIGN DEPARTMENT
e-mail: moulddesign@rubin-glass.bg
web site: www.rubin-glass.bg

WEIGHT	280 ± 10g
NOMINAL CAPACITY	ml
BRIMFUL CAPACITY	590 ± 15ml
COLOR	FLINT
FILLING LINE	---- mm
TIP ANGLE	----
HEADSPACE	---- %
CARBONATION	----
RETURNABLE	----
CUSTOMER	ADM VETRO
PRODUCTION PROCESS	PRESS&BLOW

REV.