

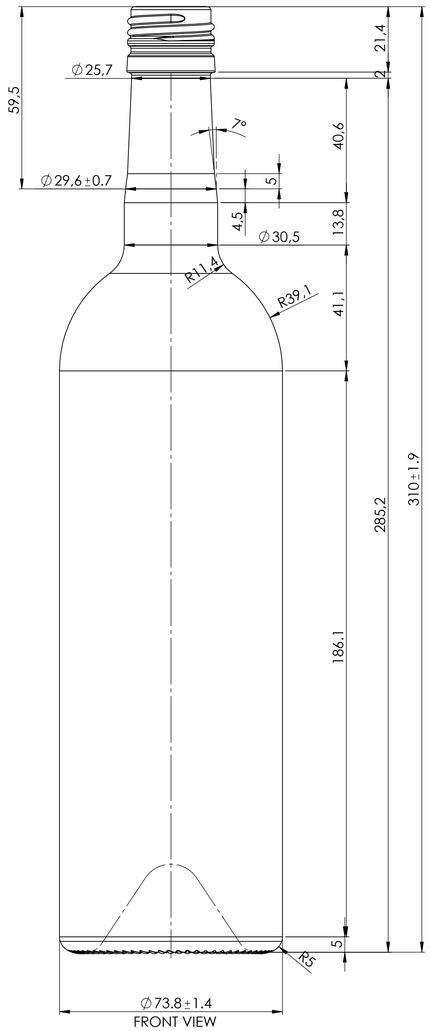

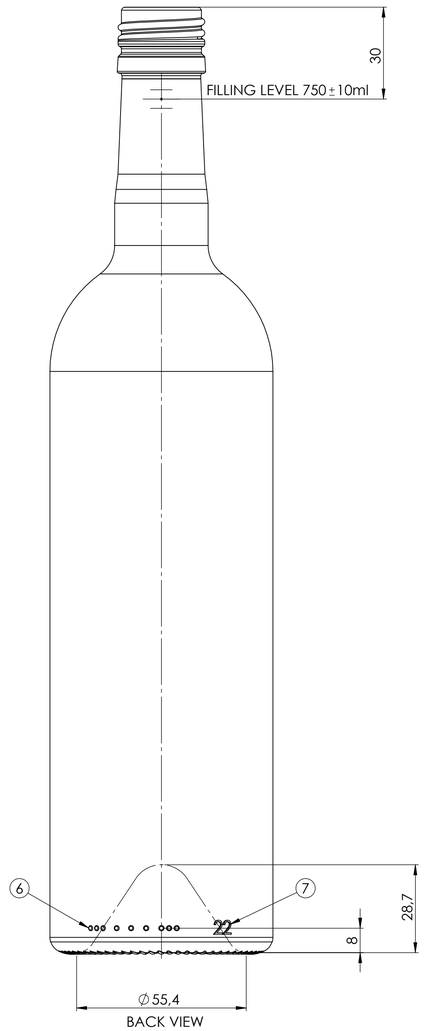

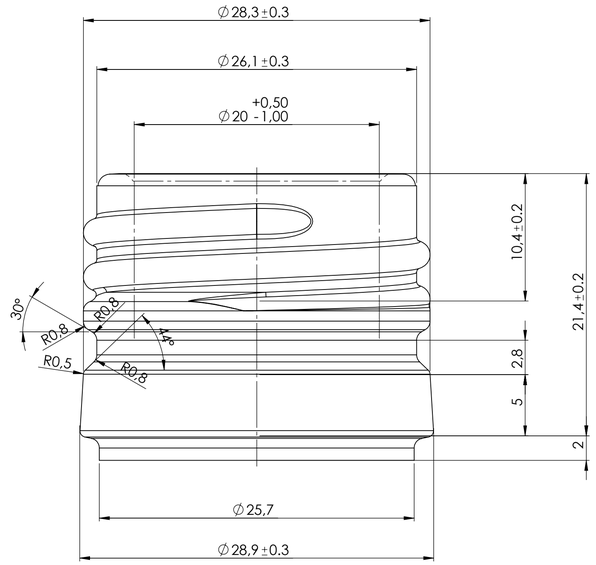

FINISH DETAIL
SCALE 4;1

MINIMUM THROUGH BORE ∅17



1. FILLING LEVEL - 5mm HEIGHT, 0.6mm DEEP
2. EPSILON SYMBOL - 5mm HEIGHT, 0.6mm DEEP
3. FILLING LEVEL - 5mm HEIGHT, 0.6mm DEEP
4. FACTORY LOGO - 5mm HEIGHT, 0.6mm DEEP
5. "A" LETTER - 5mm HEIGHT, 0.6mm DEEP
6. 13 DOT CODE
7. CAVITY NUMBER - 5mm HEIGHT, 0.6mm DEEP
8. DOT KNURLING
9. STIPPLES - 68pcs, 0.5mm DEEP

All copyrights are reserved. This technical document should not be disclosed to third parties without the permission of "RUBIN TRADING" JSC.

5	
4	
3	
2	
1	

-----REVISIONS-----

"RUBIN TRADING" JSC - MOULD DESIGN DEPARTMENT
e-mail: moulddesign@rubin-glass.bg
web site: www.rubin-glass.bg

SHEET 1/1	PRODUCT NAME:	**BOTTLE BORDOLESE 750ml.**			
A1	ИЗДЕЛИЕ:	**БУТИЛКА БОРДОЛЕЗЕ 750ml.**			
SCALE	Drawing No: **133100_BOTTLE_BORDOLESA_750ml_BVS30H**			FINISH TYPE: BVS30H60 - CETIE GME30.13	
1:1	DRAWN:	N.PETKOV	08/11/24	PRODUCT CODE: 133100	DATE 09.04.2025
	CHECKED:	KAMENOV	08/11/24		

WEIGHT	410 ± 10 g
NOMINAL CAPACITY	750 ± 10 ml
BRIMFUL CAPACITY	759 ± 10 ml
COLOR	FLINT/UVAG
FILLING LINE	30 mm
TIP ANGLE	14,7°
HEADSPACE	1.18 %
CARBONATION	NO
RETURNABLE	NO
CUSTOMER	FACTORY OWNED
PRODUCTION PROCESS	BLOW&BLOW
REV.	